Official website：www .aodetcu.com

苏州奥德高端装备股份有限公司 (总部一厂区)
Suzhou AODE Precise Equipment Co., Ltd.
(Headquarter & Plant 1)

地址：苏州昆山市高新区城北五联路228号
Add: NO.228 Wulian road, Chengbei, High-tech Zone, Kunshan City, Jiangsu Province, China.
电话/Tel：+86-512-57885715
邮箱/E-mail：mkt@aodejx.com
海外业务电话/Overseas Business Contact: +86-18020208608

苏州奥德高端装备股份有限公司 锅炉事业部 (二厂区)
Boiler Business Division (Plant 2)
Suzhou AODE Precise Equipment Co., Ltd.

地址：江苏省昆山市玉山镇玉杨路366号
Add：No.366 Yuyang Road,Yushan Town,Kunshan City,Jiangsu Province, China.
电话/Tel：+86-512-36820166

苏州奥德高端装备股份有限公司 制冷事业部 (三厂区)
Refrigeration Business Division (Plant 3)
Suzhou AODE Precise Equipment Co., Ltd.

地址：江苏省昆山市玉山镇勤昆路66号8号房
Add：Room 8, 66 Qinkun Road, Yushan Town, Kunshan City, Jiangsu Province, China.
电话/Tel：+86-512-57885715

深圳市奥德机械有限公司
AODE Machinery (Shenzhen) Co., Ltd.

地址：深圳市宝安区松岗镇东方大道田洋三路9号
Add: NO.9, Tianyang Three Road, Dongfang Avenue,Songgang Town, Baoan District, Shenzhen city,Guangdong Province, China.
电话/Tel：+86-755-23116643

天津莱奥德机械有限公司
Tianjin Lai' AODE Machinery Co., Ltd.

地址：天津市北辰区中关村可信产业园B2-3-2楼
Add：Floor B2-3-2, Zhongguancun Kexin Industrial Park, Beichen District, Tianjin Municipality, China.
电话/Tel：+86-512-57885715

昆山奥兰克泵业制造有限公司
AULANK Pumps Manufacturing Co.,Ltd.

地址：江苏省昆山市巴城镇东荣路151号1号厂房
ADD: Plant 1 No.151 Dongrong Road, Bacheng Town, Kunshan City, Jiangsu Province, China.
电话/Tel：+86-512-55193403

Official Accounts　Video number　YouTube　Tik tok

AODE 奥德

FOCUS ON SOPHISTICATED INDUSTRIAL TEMPERATURE CONTROL

VERSION 202410

CONTENTS

TEMPERATURE CONTROL

AODE

20 YEARS+
ACCUMULATION

50000㎡+
PRODUCTION AREA

11000+
CUSTOMER CASES

10000+
PRODUCTION CAPACITY

306+
PATENTS

ABOUT AODE

Founded in Shenzhen in 2004 and established its headquarters in Suzhou in 2007, AODE has been focusing on the industrial temperature control field and is a temperature control equipment manufacturer integrating R&D, production and sales. After 20 years of innovative development and precipitation, AODE products from a single heating series development to heating, cooling, cooling and heating in one and centralised cooling, centralised heating of a full range of product matrix, with different industries to provide diversified, customised temperature control product solutions. At present, there are 5 production bases in East China and South China, and sales and service centres in Tianjin, Chongqing and Qingdao. So far, AODE has successfully provided more than 11,000 enterprises with efficient and stable temperature control product services, and set up a benchmark in the industry.

FULL RANGE OF PRODUCTS TO MEET THE NEEDS OF DIFFERENT APPLICATION SCENARIOS

STANDARD + CUSTOMISED

MOULD TEMPERATURE MACHINE SERIES

Main products: oil temperature machine, water temperature machine, 320 °C die-casting mould temperature machine, 200 °C high-temperature water temperature machine, 400 °C ultra-high-temperature oil temperature machine, rapid cooling and rapid heating of high-gloss mould temperature machine, electrically heated organic heat carrier furnace.

CHILLER SERIES

Main products: air-cooled/water-cooled chiller, air-cooled chiller/oil chiller, air-cooled/water-cooled screw chiller, water-cooled screw low-temperature chiller, evaporative cooled screw chiller, -120°C compound stacked ultra-low-temperature machine and so on.

HIGH AND LOW TEMPERATURE SERIES

Main products: High and low temperature integrated intelligent control machine, applications: semiconductor, automotive parts testing, chemical and pharmaceutical.

POINT COLD SERIES

Main products: high-pressure point cooler, multi-channel high-temperature water heater, mould cooling station, mould cooler, mould temperature control monitoring system, die-casting workshop whole plant water supply temperature control system, integrated control system, etc.

BOILER SERIES

Main products: fuel oil (gas) organic heat carrier boiler, fuel oil (gas) steam boiler, fuel oil (gas) hot water boiler, electrically heated organic heat carrier boiler and so on.

PUMP SERIES

Main products: high and low temperature magnetic drive centrifugal pumps, high and low temperature magnetic drive vortex pumps, high-pressure vane pumps, precision vortex pumps, non-leakage vertical pumps, high-flow centrifugal pumps, stainless steel centrifugal pumps, chemical pumps and so on.

HIGH PRECISION OF TEMPERATURE CONTROL

The temperature control precision of the product can reach ±0.1°C, which is at the leading level of the same industry in China, breaking the temperature control technology blockade of Europe and the United States in the field of optical lens.

WIDE RANGE OF TEMPERATURE CONTROL

The temperature control range of industrial temperature control equipment is between -120°C and +400°C, and the temperature resistance range of high and low temperature pump is between -196 °C and +400°C.

FAST RATE OF TEMPERATURE CONTROL

AODE's self-developed "water/oil hot and cold rapid switching technology" can achieve rapid cooling and heating automatic switching temperature control, providing efficient and accurate temperature control for various industrial applications.

SAFE AND STABLE

AODE products are designed to take multiple protection measures (power supply phase sequence detection, motor overload protection, flow detection, pressure detection, temperature detection, etc.) to ensure the safe and stable operation of the equipment.

ENERGY EFFICIENT AND ENVIRONMENTALLY FRIENDLY

Through multiple innovations such as "High-efficiency Low-NOx Gas Condensing Boiler Technology" and "VOCs Condensing Recovery Refrigeration Technology", AODE is able to effectively improve the heating/cooling efficiency and reduce NOx and carbon emissions.

INTELLIGENT CONTROL

The products produced by AODE can achieve energy consumption detection, online monitoring, data analysis, remote control, alarm linkage and so on.

INDUSTRIAL TEMPERATURE CONTROL SYSTEM INTEGRATION
工业温控装备系统集成

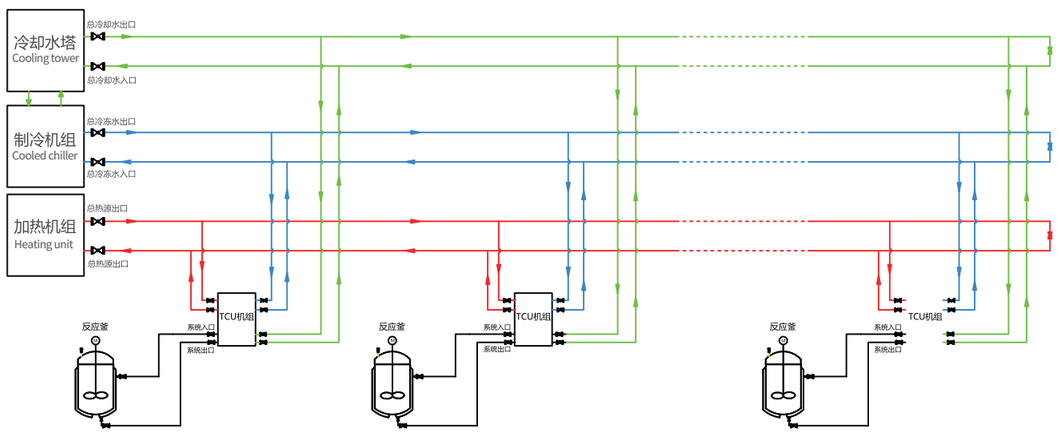

INDUSTRIAL CHILLER SERIES
冷水机系列

AODE chiller series products mainly include air-cooled industrial chiller, water-cooled industrial chiller, air-cooled screw chiller, water-cooled screw chiller, water-cooled screw low-temperature chiller, evaporative cooled screw chiller, stacked ultra-low-temperature unit, which are widely used in chemical industry, pharmaceuticals, energy storage, 5G materials, 3C communications, circuit boards, semiconductors, military industry, aerospace industry, rail transportation, optical lenses, sheet/board/circuit boards, and so on. film material, dyeing and printing, rubber, injection moulding, packaging, drying, thermoforming of composite material, carbon fibre products and other industries.

FEATURES

- The unit has complete protection functions, including power phase sequence, high and low pressure, motor overload, anti-freezing protection, etc
- Adopt international well-known brand compressor, high-efficient threaded tube heat exchanger
- Tank and water pipe material is stainless steel SUS304
- Refrigeration valves using Danfoss, Emerson and other well-known brands
- Electrical components using ABB, Siemens, Omron and other well-known brands

AIR COOLED INDUSTRIAL CHILLER

风冷式工业冷水机 +7°C ❄ +25°C

ITEM		UNIT	AC-01AS	AC-03AS	AC-05AS	AC-10AS	AC-15AS	AC-20AD	AC-25AD	AC-30AD	AC-50AD	AC-60AF
Cooling Capacity		kcal/h	2494	7482	11782	24768	36550	49536	57448	73100	114896	154800
		kW	2.9	8.7	13.7	28.8	42.5	57.6	66.8	85	133.6	180
Power Input		kW	1.4	3.4	5.1	9.9	15.6	20.1	23.3	30.2	49	59.2
Running Current		A	6.3	6.8	10.2	19.7	31.2	40	46.5	60.4	98	118.4
Refrigerant		/	R410A									
Control Type		/	Digital temperature display microcomputer controller									
Power Supply Type		/	1N，220V，50Hz	3N，380V，50Hz								
Safety Protection Device		/	Overload、Inverse Phase(3 Ph)、High/Low Pressure、Low Level、Antifreeze Protection，etc									
Compressor	Type	/	Hermetic Rotor Or Scroll Type									
	Power	kW	0.9x1	2.7x1	4x1	8x1	12.7x1	8x2	9.6x2	12.7x2	20.5x2	12.7x4
Condenser	Type	/	MCHE Or Finned Tubes									
	Air Flow	m^3/h	1000	3000	5000	10000	15000	20000	25000	30000	50000	60000
	Fan Power	kW	0.11x1	0.33x1	0.55x1	1.1x1	0.8x2	1.1x2	1.1x2	1.1x2	2.2x2	1.1x4
Evaporator	Type	/	Submerged Coil Type			Dry Shell And Tube Type						
	In/Out Pipe Size	Inch	1/2	1	1	1.5	2	2.5	2.5	2.5	3	3
Tank Volume		L	30	70	70	120	120	200	200	200	400	400
Pump	Flow	m^3/h	0.5	1.5	2.4	5	7.3	9.9	11.5	14.9	23	31
	Pressure	bar	2.7	2.5	2.7	2.7	2.7	3	3	3.4	3	2.9
	Power	kW	0.37	0.37	0.55	0.75	1.3	1.85	1.85	2.6	3.5	4
Size(L×W×H)		cm	65*65*70	110*72*82	140*68*120	150*820*172	200*92*180	225*112*220			250*150*245	240*200*220
Net Weight		kg	90	150	170	370	520	590	790	880	1280	1420
Refrigerant Charge		kg	0.8	2.7	4.3	8.5	13	17	21	25	42	50

WATER COOLED INDUSTRIAL CHILLER

水冷式工业冷水机 +7°C ❄ +25°C

ITEM		UNIT	AC-05WS	AC-10WS	AC-15WS	AC-20WD	AC-25WD	AC-30WD	AC-50WD	AC-60WF
Cooling Capacity		kcal/h	13158	27950	41280	55900	64156	82560	128312	165120
		kW	15.3	32.5	48	65	74.6	96	149.2	192
Power Input		kW	3.9	7.5	12	15.3	17.5	24	36.9	46.8
Refrigerant		/	R410A							
Control Type		/	Digital temperature display microcomputer controller							
Power supply		/	3N，380V，50Hz							
Safety Protection Device		/	Overload、Inverse Phase、High/Low Pressure、Low Level、Antifreeze Protection，etc							
Compressor	Type	/	Hermetic Rotor Or Scroll Type							
	Power	kW	3.3	6.5	10.7	6.5x2	7.4x2	10.7x2	16.7x2	10.7x4
Condenser	Type	/	Shell And Tube Type							
	Water Flow	m^3/h	3	7	10	14	16	21	32	41
	In/Out Pipe Size	Inch	1	1.5	2	2	2.5	2.5	3	3
Evaporator	Type	/	Submerged Coil Type	Dry Shell And Tube Type						
	In/Out Pipe Size	Inch	1	1.5	2	2.5	2.5	2.5	3	3
Tank Volume		L	70	120	120	200	200	200	400	400
Pump	Flow	m^3/h	2.6	5.6	8.2	11.2	12.8	16.8	25.7	32.7
	Pressure	bar	2.7	2.7	2.7	3	3	3.4	3	2.9
	Power	kW	0.55	0.75	1.3	1.85	1.85	2.6	3.5	4
Size(L×W×H)		mm	1000*520*1120	1400*630*1450	1780*800*1650	1800*870*1670		2300*1120*1670	2700*1320*1800	
Net Weight		kg	150	300	400	440	620	690	1000	1100
Refrigerant Charge		kg	2.8	5.6	8.4	11.2	13.6	16.8	27.2	34

AIR COOLED SCREW CHILLER

风冷螺杆冷水机 +7°C ❄ +25°C

ITEM		UNIT	ACS-230AS	ACS-260AS	ACS- 310AS	ACS-340AS	ACS-370AS	ACS-410AS
Cooling Capacity		kcal/h	148436	159444	198918	221450	238478	259204
		kW	172.6	185.4	231.3	257.5	277.3	301.4
Total Power Input		kW	83.4	90.2	106.9	115.7	129.3	141.3
Running Current		A	167	180	214	231	259	283
Refrigerant		/	R404A/R507					
Steps Control		%	0/25/50/75/100					
Temperature Control Range		°C	+7～+25					
Control Type		/	Automatic Control, Color LCD Touch Screen					
Power Supply Type		/	3N，380V，50Hz					
Safety Protection Device		/	Overload、 Inverse Phase、High/Low Pressure、 Safety Valve、 Water Flow、 Oil Level、 Exhaust Temperature、 Antifreeze Protection，etc					
Compressor	Type	/	Semi-hermetic Screw					
	Start Type	/	Y-Δ					
	Amount	Sets	1					
Condenser	Type	/	MCHE Or Finned Tubes					
	Air Flow	m^3/h	70000	80000	90000	100000	110000	120000
	Total Fan Power	kW	8.8	8.8	8.8	8.8	13.2	13.2
	Amount	Sets	4	4	4	4	6	6
Evaporator	Type	/	Shell And Tube Type					
	Water Flow	m^3/h	30	32	40	44	48	52
	Water Pressure Drop	kPa	80	80	80	85	85	85
	In/Out Pipe Size	DN	80	80	80	80	100	100
Size（L×W×H）		cm	260*220*263				400*220*263	
Net Weight		kg	1620	1750	2180	2430	2620	2840
Refrigerant Charge		kg	40	43	53	59	64	70

WATER COOLED SCREW CHILLER

水冷螺杆冷水机 +7°C ❄ +25°C

ITEM		UNIT	ACS-410WS	ACS-470WS	ACS-510WS	ACS-580WS	ACS-710WS	ACS-940WD	ACS-1160WD	ACS-1420WD
Cooling Capacity		kcal/h	369972	449952	470764	563730	681808	899904	1127460	1363616
		kW	430.2	523.2	547.4	655.5	792.8	1046	1311	1586
Power Input		kW	103	123.3	126	151.7	181.1	247	303	362
Running Current		A	206	247	252	303	362	493	607	724
Refrigerant		/	R507							
Steps Control		%	0/25/50/75/100							
Temperature Control Range		°C	+7～+25							
Control Type		/	Automatic Control, Color LCD Touch Screen							
Power Supply Type		/	3N，380V，50Hz							
Safety Protection Device		/	Overload、 Inverse Phase、High/Low Pressure、 Safety Valve、 Water Flow、 Oil Level、Exhaust Temperature、 Antifreeze Protection，etc							
Compressor	Type	/	Semi-hermetic Screw							
	Start Type	/	Y- Δ							
	Amount	Sets	1					2		
Condenser	Type	/	Shell And Tube Type							
	Water Flow	m^3/h	92	112	118	141	170	225	282	341
	Water Pressure Drop	kPa	65	65	70	70	75	95	95	95
	In/Out Pipe Size	DN	125	125	125	150	150	200	200	200
Evaporator	Type	/	Shell And Tube Type							
	Water Flow	m^3/h	74	90	94	113	136	180	225	273
	Water Pressure Drop	kPa	60	60	65	65	70	90	90	90
	In/Out Pipe Size	DN	125	125	125	150	150	200	200	200
Size(L×W×H)		cm	328*91*189	330*99*195	330*99*201	356*108*210	358*113*225	353*144*221	371*146*229	395*153*242
Net Weight		kg	2080	2320	2490	2770	3310	3990	4760	5670
Refrigerant Charge		kg	70	84	89	105	127	158	197	239

WATER COOLED LOW TEMPERATURE SCREW CHILLER

水冷螺杆低温冷水机 -10°C ❄ -30°C

ITEM		UNIT	ACSL-410WS	ACSL-470WS	ACSL-510WS	ACSL-580WS	ACSL-710WS	ACSL-940WD	ACSL-1160WD	ACSL-1420WD
Cooling Capacity(-10°C)		kcal/h	190060	230480	241660	289820	350020	460960	579640	700040
		kW	221	268	281	337	407	536	674	814
Power Input(-10°C)		kW	103	123	126	151	180	246	302	360
Running Current(-10°C)		A	206	246	252	302	360	492	604	720
Cooling Capacity(-20°C)		kcal/h	124700	151360	158240	190060	229620	302720	380120	459240
		kW	145	176	184	221	267	352	442	534
Power Input(-20°C)		kW	98	117	120	144	172	234	288	344
Cooling Capacity(-30°C)		kcal/h	78260	94600	99760	119540	144480	189200	239080	288960
		kW	91	110	116	139	168	220	278	336
Power Input(-30°C)		kW	88	105	110	131	156	210	262	312
Refrigerant		/	R404A/R507							
Steps Control		%	0/25/50/75/100							
Temperature Control Range		°C	-10～-30							
Control Type		/	Automatic Control, Color LCD Touch Screen							
Power Supply Type		/	3N 380V，50Hz							
Safety Protection Device		/	Overload、 Inverse Phase、High/Low Pressure、 Safety Valve、 Water Flow、 Oil Level、Exhaust Temperature、Antifreeze Protection，etcB							
Compressor	Type	/	Semi-hermetic Screw							
	Start Type	/	Y-Δ							
	Amount	Sets	1					2		
Condenser	Type	/	Shell And Tube Type							
	Water Flow	m^3/h	80	97	101	122	147	194	243	294
	Water Pressure Drop	kPa	65	65	70	70	75	95	95	95
	In/Out Pipe Size	DN	125	125	125	150	150	200	200	200
Evaporator	Type	/	Shell And Tube Type							
	Water Flow	m^3/h	64	77	81	97	118	155	195	235
	Water Pressure Drop	kPa	60	60	65	65	70	90	90	90
	In/Out Pipe Size	DN	125	125	125	150	150	200	200	200
Size (L×W×H)		cm	328*91*189	330*99*195	330*99*201	356*108*210	358*113*225	353*144*221	371*146*229	395*153*242
Net Weight		kg	2080	2320	2490	2770	3310	3990	4760	5670
Refrigerant Charge		kg	70	84	89	105	127	158	197	239

AODE奥德

EVAPORATIVE LOW TEMPERATURE SCREW CHILLER

蒸发冷螺杆低温冷水机 -10°C ❄ -30°C

ITEM		UNIT	ACSL-410ES	ACSL-470ES	ACSL-510ES	ACSL-580ES	ACSL-710ES	ACSL-940ED	ACSL-1160ED	ACSL-1420ED
Cooling Capacity(-10°C)		kcal/h	198660	241660	252840	302720	366360	483320	605440	732720
		kW	231	281	294	352	426	562	704	852
Power Input(-10°C)		kW	94	112	114	138	164	224	276	328
Running Current(-10°C)		A	188	224	228	276	328	448	552	656
Cooling Capacity(-20°C)		kcal/h	131580	159960	167700	200380	243380	319920	400760	486760
		kW	153	186	195	233	283	372	466	566
Power Input(-20°C)		kW	89	106	109	131	156	212	262	312
Cooling Capacity(-30°C)		kcal/h	80840	98900	103200	123840	149640	197800	247680	299280
		kW	94	115	120	144	174	230	288	348
Power Input(-30°C)		kW	81	98	100	121	145	196	242	290
Refrigerant		/	R404A/R507							
Steps Control		%	0/25/50/75/100							
Temperature Control Range		°C	-10～-30							
Control Type		/	Automatic Control, Color LCD Touch Screen							
Power Supply Type		/	3N，380V，50Hz							
Safety Protection Device		/	Overload、 Inverse Phase、High/Low Pressure、 Safety Valve、 Water Flow、 Oil Level、Exhaust Temperature、Antifreeze Protection，etc							
Compressor	Type	/	Semi-hermetic Screw							
	Start Type	/	Y-Δ							
	Amount	Sets	1					2		
Evaporator	Type	/	Shell And Tube Type							
	Water Flow	m^3/h	67	81	85	102	123	162	203	246
	Water Pressure Drop	kPa	60	60	65	65	70	90	90	90
	In/Out Pipe Size	DN	125	125	125	150	150	200	200	200
Condenser	Type	/	Evaporation Type (Separate Supply)							
	Pump Power	kW	2.2	2.2	2.2	2.2	2.2	3.0	4.0	5.5
	Water Flow	m^3/h	80	80	80	80	80	130	170	230
	Fan Power	kW	5.5	5.5	7.5	7.5	7.5	11	11	16.5
	Air Flow	m^3/h	80000	80000	110000	110000	110000	156000	174000	234000
Compressor Unit Size		cm	328*91*189	330*99*195	330*99*201	356*108*210	358*113*225	353*144*221	371*146*229	395*153*242
Compressor Unit Weight		kg	1660	1860	1900	2200	2600	3200	3800	4500
ondenser Size(L×W×H)		cm	229*321*492	229*321*492	229*321*492	229*321*492	229*321*492	413*301*494	425*301*494	567*261*494
Condenser Weight		kg	6200	6200	6220	6220	6220	11250	13390	14000
Refrigerant Charge		kg	140	170	180	210	250	320	400	480

CASCADE REFRIGERATING UNIT

复叠式超低温机组 -70℃ ❄ -100℃

ITEM		UNIT	ACL-50KW-70	ACL-90KW-70	ACL-40KW-100
Cooling Capacity		kcal/h	43000	72928	34400
		kW	50	90	40
Outlet Temperature		℃	-70	-70	-100
Power Input		kW	100	140	180
Max. Power Input		kW	150	210	270
Refrigerant		/	R404A/R23		R404A/R23/R14
Control Type		/	Automatic Control, Color LCD Touch Screen		
Power Supply Type		/	3N，380V，50Hz		
Safety Protection Device		/	Overload、Inverse Phase、High/Low Pressure、Safety Valve、Water Flow、Exhaust Temperature、Antifreeze Protection，etc		
Compressor	Type	/	Semi-hermetic		
Condenser	Type	/	Shell And Tube Type		
	Water Flow	m^3/h	65	88	88
	Water Pressure Drop	kPa	80	95	95
	In/Out Pipe Size	DN	80	100	100
Evaporator	Type	/	Plate Type		
	Liquid Flow	m^3/h	22	40	18
	Pressure Drop	kPa	50	80	80
	In/Out Pipe Size	DN	50	65	50
Size(L×W×H)		cm	380*220*260	450*220*260	550*220*260
Net Weight		kg	5200	5900	6800

WATER-COOLED AIR SUSPENSION CENTRIFUGAL CHILLER

水冷气悬浮离心式冷水机 +7℃ ❄ +25℃

ITEM		UNIT	ACC-200RTW	ACC-250RTW	ACC-300RTW	ACC-350RTW	ACC-400RTW	ACC-500RTW	ACC-600RTW	ACC-700RTW
Cooling Capacity		kcal/h	653720.4	770078.4	925446	1063734	1307440.8	1540156.8	1850892	2127468
		kW	760.14	895.44	1076	1237	1520.28	1790.88	2173.3	2473.8
Power Input		kW	122.6	144.4	174.8	199.5	245.1	288.8	349.6	399.0
COP		W/W	6.2	6.2	6.2	6.2	6.2	6.2	6.2	6.2
Running Current		A	245	289	350	399	490.2	577.6	699.2	798
Refrigerant		/	R134a							
Steps Control		%	30～100							
Temp control range		℃	+7～+25							
Control Type		/	Automatic Control, Color LCD Touch Screen							
Power Supply Type		/	3N，380V，50Hz							
Safety Protection Device		/	Overload、Inverse Phase、High/Low Pressure、Safety Valve、Water Flow、Exhaust Temperature、Antifreeze Protection、Surge Protection，etc							
Compressor	Type	/	Air Suspension Centrifugal							
	Start Type	/	VFD startup							
	Amount	Sets	1				2			
Condenser	Type	/	Shell And Tube Type							
	Water Flow	m^3/h	152	179	215	247	304	358	434	494
	Water Pressure Drop	kPa	40	45	50	55	60	70	80	90
	In/Out Pipe Size	DN	125	150	200	200	200	200	250	250
Evaporator	Type	/	Shell And Tube Type							
	Water Flow	m^3/h	131	154	185	213	261	308	374	425
	Water Pressure Drop	kPa	38	40	45	52	55	68	78	85
	In/Out Pipe Size	DN	125	150	200	200	200	200	250	250
Size(L×W×H)		cm	360*160*220	360*160*230	380*160*230	380*160*240	392*224*240	392*232*245	392*232*245	398*252*250
Net weight		kg	3900	4500	5500	6500	7500	8500	9500	10500
Refrigerant Charge		kg	200	230	280	330	400	460	560	660

APPLICATIONS
应用领域

TO ACHIEVE INDUSTRY-WIDE COVERAGE IN THE INDUSTRIAL SECTOR AND IMPORT SUBSTITUTION OF HIGH-END PRODUCTS.

5G materials, 3C communications, energy storage, integrated die-casting, circuit boards, semiconductors, military, new energy, aerospace, scientific research, rail transportation, automotive parts, chemicals, pharmaceuticals, precision injection moulding, rubber, sheet/sheet/film, food, printing and dyeing, packaging, drying, composite materials, carbon fibre products and so on.

COMPONENT
选用配件

Germany BITZER, Germany BOCK, Taiwan HANZHONG, the United States of America Copeland, Denmark Danfoss, Japan Panasonic compressor; Denmark Grundfos pump, Germany specK pump; Alfa Laval heat exchanger

High-efficiency condenser, evaporator; Danish Danfoss, Italy Carle throttle device; Danish Danfoss pressure transmitter; Japan ARK air filter; Italy OR solenoid valve; Germany RTK proportional valve and so on.

Germany Siemens controller, human-machine interface, contactor, thermal relay, Japan Omron phase sequence protection and other well-known brands of electronic components

COOPERATION BRANDS
合作品牌

SIEMENS, Danfoss, HANBELL, spirax sarco, YOKOGAWA, bürkert, ALLWEILER, GEA, Panasonic, GRUNDFOS, SWEP, ASCO numatics, RTK, SAMSON, KSB

模温机安装管路流程图
MOLD TEMPERATURE CONTROL UNIT PIPELINE INSTALLATION DRAWING

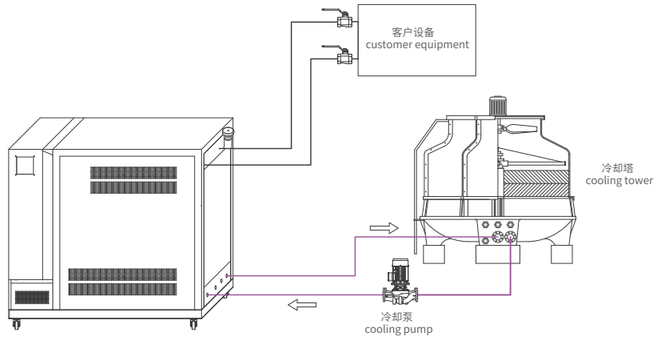

模温机、冷水机组合外部管路连接图
MOLD TEMPERATURE CONTROL UNIT AND CHILLER'S PIPELINE CONNECTION DIAGRAM

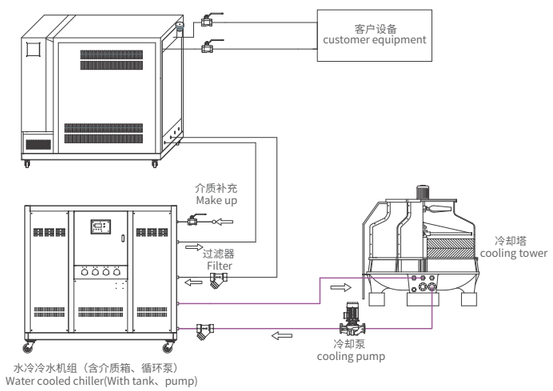

燃气(油)有机热载体炉外部连接管路
GAS /FUEL FIRED ORGANIC HEAT TRANSFER MATERIAL HEATER PIPELINE DRAWING

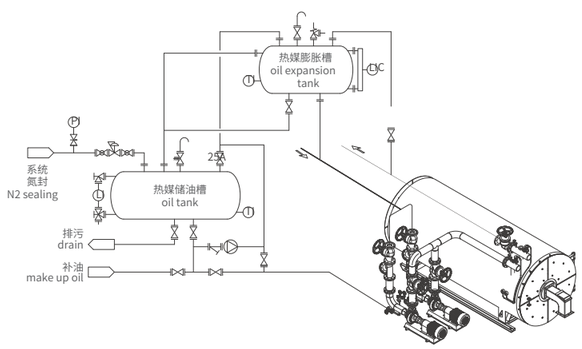

风冷螺杆冷水机组外部管路连接参考图
AIR COOLED SCREW CHILLER PIPE CONNECTION DIAGRAM

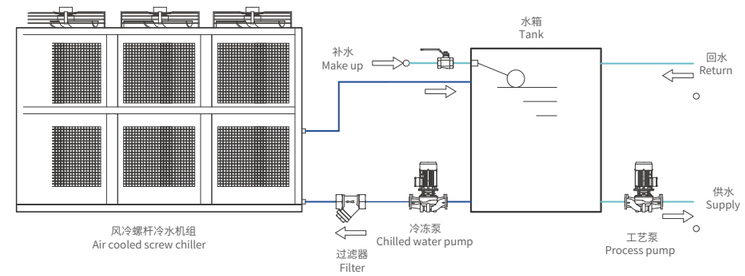

水冷冷水(油)机组外部管路连接参考图
WATER COOLED CHILLER PIPE CONNECTION DIAGRAM

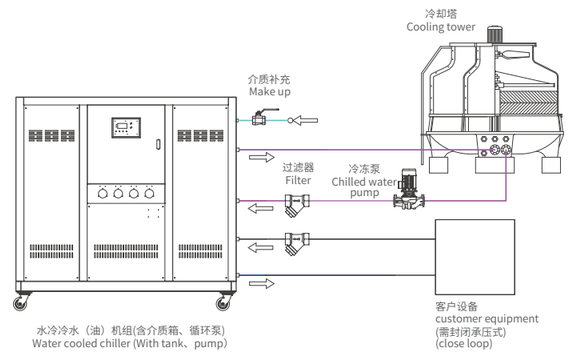

水冷螺杆冷水机组外部管路连接参考图
WATER COOLED SCREW CHILLER PIPE CONNECTION DIAGRAM

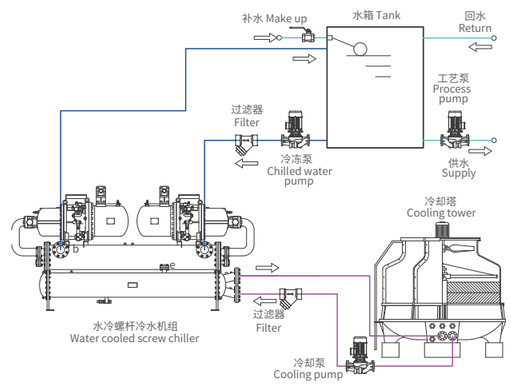

SUCCESSFUL CASES
成功案例

CHOOSE AODE

In China, Aode's professionalism makes the national brand replace the imported brand.
Overseas, Aode's quality makes us the pride of Made in China. Temperature control we guarantee for you.
For more cases,please visit the website： www.aodetcu.com

❶ Automotive integrated die-casting	❷ Die-casting industry	❸ Wind power industry	❹ chemical medicine
❺ Testing Industry	❻ Organic heat carrier furnace (chemical fibre)	❼ petrochemicals	❽ 5G circuit boards
❾ Rubber industry	❿ Moulding temperature control	⓫ Temperature control for calendering lines	⓬ Injection moulding industry


1


2


3


4


5


6


7


8


9


10


11


12

OUR PARTNERS
合作伙伴.

11000+成功案例
11,000 + Success Stories

已有超过80000台/套奥德设备在全球范围内连续稳定运转
There are more than 80,000 units of AODE equipment in continuous and stable operation around the world.

*以上列举部分合作品牌且排名不分先后

化工行业 CHEMICAL INDUSTRY

新能源/汽车部件检测 NEW ENERGY VEHICLE/AUTOMOTIVE COMPONENT TESTING

橡胶行业 RUBBER INDUSTRY

塑胶行业 PLASTIC INDUSTRY

压铸行业 DIECASTING INDUSTRY

片板模 SHEET/PLATE/fiLM INDUSTRY

复材行业 COMPOSITE MATERIAL INDUSTRY

大学及科研院校 UNIVERSITIES AND RESEARCH INSTITUTES