Official website：www .aodetcu.com

苏州奥德高端装备股份有限公司 (总部一厂区)
Suzhou AODE Precise Equipment Co., Ltd.
(Headquarter & Plant 1)

地址：苏州昆山市高新区城北五联路228号
Add: NO.228 Wulian road, Chengbei, High-tech Zone, Kunshan City, Jiangsu Province, China.
电话/Tel：+86-512-57885715
邮箱/E-mail：mkt@aodejx.com
海外业务电话/Overseas Business Contact: +86-18020208608

苏州奥德高端装备股份有限公司 锅炉事业部 (二厂区)
Boiler Business Division (Plant 2)
Suzhou AODE Precise Equipment Co., Ltd.

地址：江苏省昆山市玉山镇玉杨路366号
Add：No.366 Yuyang Road,Yushan Town,Kunshan City,Jiangsu Province, China.
电话/Tel：+86-512-36820166

苏州奥德高端装备股份有限公司 制冷事业部 (三厂区)
Refrigeration Business Division (Plant 3)
Suzhou AODE Precise Equipment Co., Ltd.

地址：江苏省昆山市玉山镇勤昆路66号8号房
Add：Room 8, 66 Qinkun Road, Yushan Town, Kunshan City, Jiangsu Province, China.
电话/Tel：+86-512-57885715

深圳市奥德机械有限公司
AODE Machinery (Shenzhen) Co., Ltd.

地址：深圳市宝安区松岗镇东方大道田洋三路9号
Add: NO.9, Tianyang Three Road, Dongfang Avenue,Songgang Town, Baoan District, Shenzhen city,Guangdong Province, China.
电话/Tel：+86-755-23116643

天津莱奥德机械有限公司
Tianjin Lai' AODE Machinery Co., Ltd.

地址：天津市北辰区中关村可信产业园B2-3-2楼
Add：Floor B2-3-2, Zhongguancun Kexin Industrial Park, Beichen District, Tianjin Municipality, China.
电话/Tel：+86-512-57885715

昆山奥兰克泵业制造有限公司
AULANK Pumps Manufacturing Co.,Ltd.

地址：江苏省昆山市巴城镇东荣路151号1号厂房
ADD: Plant 1 No.151 Dongrong Road, Bacheng Town, Kunshan City, Jiangsu Province, China.
电话/Tel：+86-512-55193403

Official Accounts　Video number　YouTube　Tik tok

AODE 奥德

FOCUS ON SOPHISTICATED INDUSTRIAL TEMPERATURE CONTROL

VERSION 202410

CONTENTS

TEMPERATURE CONTROL

AODE

20 YEARS+
ACCUMULATION

50000㎡+
PRODUCTION AREA

11000+
CUSTOMER CASES

10000+
PRODUCTION CAPACITY

306+
PATENTS

ABOUT AODE

Founded in Shenzhen in 2004 and established its headquarters in Suzhou in 2007, AODE has been focusing on the industrial temperature control field and is a temperature control equipment manufacturer integrating R&D, production and sales. After 20 years of innovative development and precipitation, AODE products from a single heating series development to heating, cooling, cooling and heating in one and centralised cooling, centralised heating of a full range of product matrix, with different industries to provide diversified, customised temperature control product solutions. At present, there are 5 production bases in East China and South China, and sales and service centres in Tianjin, Chongqing and Qingdao. So far, AODE has successfully provided more than 11,000 enterprises with efficient and stable temperature control product services, and set up a benchmark in the industry.

FULL RANGE OF PRODUCTS TO MEET THE NEEDS OF DIFFERENT APPLICATION SCENARIOS

STANDARD + CUSTOMISED

MOULD TEMPERATURE MACHINE SERIES

Main products: oil temperature machine, water temperature machine, 320 °C die-casting mould temperature machine, 200 °C high-temperature water temperature machine, 400 °C ultra-high-temperature oil temperature machine, rapid cooling and rapid heating of high-gloss mould temperature machine, electrically heated organic heat carrier furnace.

CHILLER SERIES

Main products: air-cooled/water-cooled chiller, air-cooled chiller/oil chiller, air-cooled/water-cooled screw chiller, water-cooled screw low-temperature chiller, evaporative cooled screw chiller, -120°C compound stacked ultra-low-temperature machine and so on.

HIGH AND LOW TEMPERATURE SERIES

Main products: High and low temperature integrated intelligent control machine, applications: semiconductor, automotive parts testing, chemical and pharmaceutical.

POINT COLD SERIES

Main products: high-pressure point cooler, multi-channel high-temperature water heater, mould cooling station, mould cooler, mould temperature control monitoring system, die-casting workshop whole plant water supply temperature control system, integrated control system, etc.

BOILER SERIES

Main products: fuel oil (gas) organic heat carrier boiler, fuel oil (gas) steam boiler, fuel oil (gas) hot water boiler, electrically heated organic heat carrier boiler and so on.

PUMP SERIES

Main products: high and low temperature magnetic drive centrifugal pumps, high and low temperature magnetic drive vortex pumps, high-pressure vane pumps, precision vortex pumps, non-leakage vertical pumps, high-flow centrifugal pumps, stainless steel centrifugal pumps, chemical pumps and so on.

HIGH PRECISION OF TEMPERATURE CONTROL

The temperature control precision of the product can reach ±0.1°C, which is at the leading level of the same industry in China, breaking the temperature control technology blockade of Europe and the United States in the field of optical lens.

WIDE RANGE OF TEMPERATURE CONTROL

The temperature control range of industrial temperature control equipment is between -120°C and +400°C, and the temperature resistance range of high and low temperature pump is between -196 °C and +400°C.

FAST RATE OF TEMPERATURE CONTROL

AODE's self-developed "water/oil hot and cold rapid switching technology" can achieve rapid cooling and heating automatic switching temperature control, providing efficient and accurate temperature control for various industrial applications.

SAFE AND STABLE

AODE products are designed to take multiple protection measures (power supply phase sequence detection, motor overload protection, flow detection, pressure detection, temperature detection, etc.) to ensure the safe and stable operation of the equipment.

ENERGY EFFICIENT AND ENVIRONMENTALLY FRIENDLY

Through multiple innovations such as "High-efficiency Low-NOx Gas Condensing Boiler Technology" and "VOCs Condensing Recovery Refrigeration Technology", AODE is able to effectively improve the heating/cooling efficiency and reduce NOx and carbon emissions.

INTELLIGENT CONTROL

The products produced by AODE can achieve energy consumption detection, online monitoring, data analysis, remote control, alarm linkage and so on.

INDUSTRIAL TEMPERATURE CONTROL SYSTEM INTEGRATION

工业温控装备系统集成

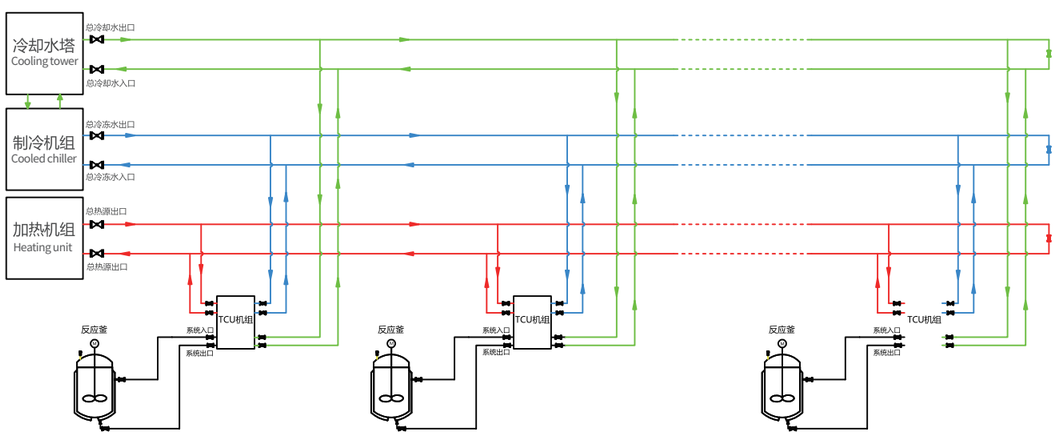

AODE奥德

DCS INTELLIGENT CONTROL SYSTEM

DCS智能控制系统

DCS是分布式控制系统，主要特点是分散控制，集中管理，DCS采用若干个控制器（过程站）对一个生产过程中的众多控制点进行控制，各控制器间通过网络连接并可进行数据交换。生产控制操作采用计算机操作站，通过网络与控制器连接，收集生产数据，传达操作指令。

DCS is a distributed control system; main features are to decentralized control and centralized manage. DCS is to control multiple control points in a production process by several controllers (process stations). Each controller is connected through network and can exchange data. Computer work stations are applied in production control process, communicate with controllers and collect production data and convey operation instruction by networks.

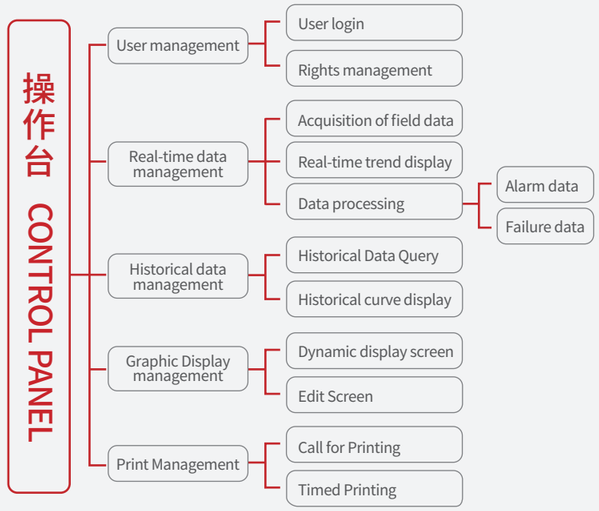

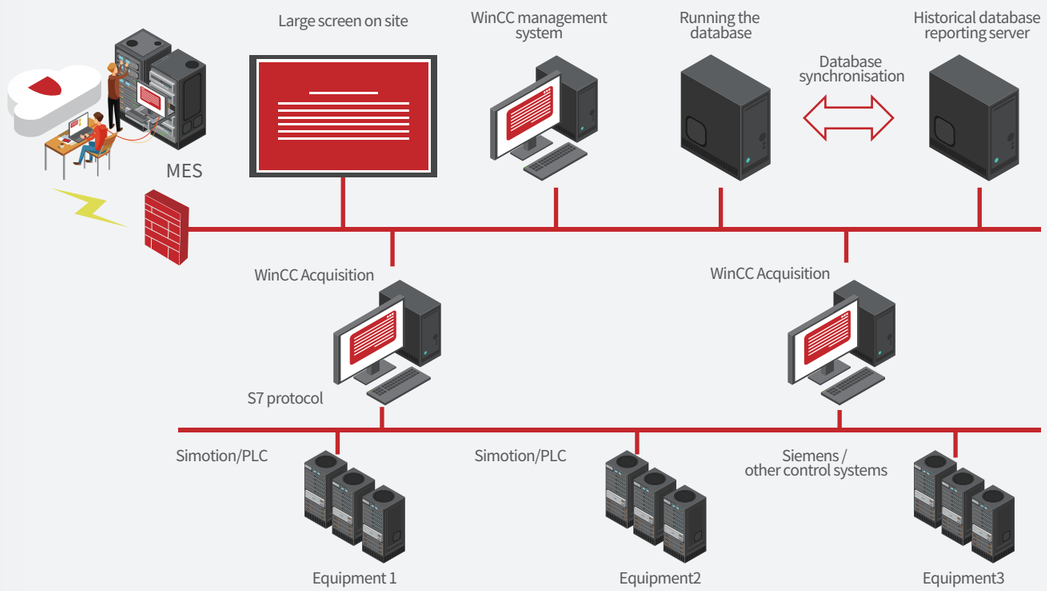

HIGH AND LOW TEMPERATURE EQUIPMENT SERIES
高低温系列

TESTING INDUSTRY ACT SERIES

Intelligent temperature control equipment for high and low temperature liquids adopts the compressor of international first-class brand, which can realise intelligent temperature, flow and pressure adjustment and monitoring, and is mainly used in the new energy automobile industry, for example, the high and low temperature performance testing of the motor, the battery pack, the controller, the heat exchanger, the pumps, the valves, the pipelines and other components.

MAIN FEATURES

- Unit operation stability The temperature control precision is high, and the rate of temperature rise and fall is fast; the temperature control precision is ±1°C;
- Is equipped with frequency conversion pump, supporting output flow and pressure adjustment in a wide range, and the flow precision is ±0.2L/min;
- Has remote communication function, supporting Rs485 and CAN communication;
- Has complete safety protection function; Containing power supply phase sequence, high and low voltage, motor overload, low liquid level, over-temperature, anti-freezing protection, etc.;
- Unit with casters, mobile and flexible; easy to install and operate and maintain.

【ACT SERIES】INTELLIGENT HIGH AND LOW LIQUID TEMPERATURE CONTROL DEVICE

高低温液体智能温控设备 +5℃ +100℃

ITEM	UNIT	ACT03WS09K W-40S-10	ACT05WS09K W-40S-10	ACT10WS12K W-40S-10	ACT15WS24K W-40S-10	ACT10WS24K W-40S-10
cooling capacity (+20°C)	kW	8.9	15.8	33.1	49.3	32.2
cooling capacity (+10°C)	kW	7	12.5	26.8	39.2	25.9
Calorific value	kW	9	9	12	24	24
Power Input	kW	12.8	14.6	22.8	40.2	35.7
Running Current	A	25.6	29.2	45.6	80.3	71.4
Power supply	/	3PH～380V ～50Hz				
Circulation medium	/	Automotive antifreeze that meets concentration requirements				
Channel number	/	1	1	1	1	2
Temp control range	°C	+5 ～+100				
Flow range (+20°C)	L/m	2～40	2～40	2～40	2～40	2～40
Tank volume	L	≥50	≥50	≥80	≥120	≥120
Operating method	/	Colour LCD touch screen				
Communication method	/	Rs485，Modbus RTU				
Refrigeration inlet and outlet pipe diameter	Inch	1.2"	1.2"	1.2"	1.2"	2 ×1.2"
Cooling inlet and outlet pipe diameter	Inch	1"	1.5"	2"	2.5"	2"
Size (L*W*H)	cm	140*70*160	140*80*202	140*80*202	180*100*202	200*120*202

【ACT SERIES】INTELLIGENT HIGH AND LOW LIQUID TEMPERATURE CONTROL DEVICE

高低温液体智能温控设备 -35℃ +100℃

ITEM	UNIT	ACT03WS09 KW-20S-35	ACT05WS09 KW-20S-35	ACT10WS12 KW-40S-35	ACT15WS24 KW-80D-35	ACT20WS24 KW-80D-35	ACT25WS24 KW-80D-35
Cooling capacity(+20°C)	kW	8.7	13.6	26.1	38.9	45.5	61.2
Cooling capacity(-20°C)	kW	2.6	4.3	8.8	12.9	15.8	22.1
Cooling capacity(-35°C)	kW	0.1	0.4	1.5	1.9	3	5.4
Calorific value	kW	9	9	12	24	24	24
Power Input	kW	16.35	18.3	26.5	49	52	60
Power supply	/	3PH～380V～50Hz					
Circulation medium	/	Automotive antifreeze that meets the concentration requirements (60% to 70% by volume of ethylene glycol)					
Channel number	/	1	1	1	2	2	2
Temp control range	°C	-35~+100					
Flow range(+20°C)	L/m	1～20	1～20	2～40	2～40	2～40	2～40
Flow range(-35°C)	L/m	1～5	1～5	2～10	2～10	2～10	2～10
Tank volume	L	⩾50	⩾50	⩾80	⩾120	⩾120	⩾120
Operating method	/	Colour LCD touch screen					
Communication method	/	Rs485，Modbus RTU（Optional CAN, Ethernet）					
Refrigeration inlet and outlet pipe diameter	Inch	3/4"	3/4"	1.2"	2×1.2"	2×1.2"	2×1.2"
Cooling inlet and outlet pipe diameter	Inch	1"	1.5"	2"	2.5"	2.5"	2.5"
Size(L*W*H)	cm	140*70*160	140*80*202	140*80*202	200*120*202	200*120*202	200*120*202

【ACT SERIES】INTELLIGENT HIGH AND LOW LIQUID TEMPERATURE CONTROL DEVICE

高低温液体智能温控设备 -40℃ +100℃

ITEM	UNIT	ACT05WS09K W - 20S -40	ACT10WS12K W-40S -40	ACT15WS24K W-40S -40	ACT15WS24K W-80D -40	ACT20WS24K W-80D -40	ACT25WS24K W-80D -40
Cooling capacity(+20°C)	kW	8.5	13.7	18.6	16.3	18.5	26.9
Cooling capacity(-20°C)	kW	7.3	11.8	16.1	13.8	15.8	23.3
Cooling capacity(-40°C)	kW	1.6	3	4.6	2.3	4.1	5.9
Calorific value	kW	9	12	24	24	24	24
Power Input	kW	19.5	28.5	44.7	47	50.9	55.8
Running Current	A	39	57	89.4	94	101.8	111.6
Power supply	/	3PH～380V～50Hz					
Circulation medium	/	Automotive antifreeze that meets the concentration requirements (60% to 70% by volume of ethylene glycol)					
Channel number	/	1	1	1	2	2	2
Temp control range	°C	-40～+100					
Flow range(+20°C)	L/m	1 ～20	2～40	2～40	2～40	2～40	2～40
Flow range(-40°C)	L/m	1 ～5	2～10	2～10	2～10	2～10	2～10
Tank volume	L	⩾50	⩾80	⩾120	⩾120	⩾120	⩾120
Operating method	/	Colour LCD touch screen					
Communication method	/	Rs485, Modbus RTU (Optional CAN, Ethernet)					
Refrigeration inlet and outlet pipe diameter	Inch	3/4"	1.2"	1.2"	2×1.2"	2×1.2"	2×1.2"
Cooling inlet and outlet pipe diameter	Inch	1"	1.5"	1.5"	1.5"	2"	2"
Size (L*W*H)	cm	140*80*202	140*80*202	180*100*202	200*120*202	200*120*202	200*120*202

【ACT SERIES】ENERGY STORAGE LIQUID COOLING TEMPERATURE CONTROL EQUIPMENT

储能液冷温控设备 +5°C +25°C

ITEM	UNIT	ACT03AS	ACT05AS	ACT10AS	ACT15AS	ACT20AD	ACT25AD
Cooling capacity(+20°C)	kW	10.4	16.4	34.6	51	69.1	80.2
Cooling capacity(+10°C)	kW	8.7	13.7	28.8	42.5	57.6	66.8
Calorific value	kW	6	9	12	12	12	12
Power Input	kW	9.8	14.7	22.6	29.1	34.6	37.8
Running Current	A		28.2	43	53.8	64.8	71.2
Power supply	/	3PH～380V～50Hz					
Circulation medium	/	Antifreeze that meets concentration requirements					
Temp control range	°C	+5 ～+25					
Rated flow rate(+20°C)	L/m		47	99	146	198	230
Tank volume	L		⩾70	⩾120	⩾120	⩾200	⩾200
Cooling air volume	m^3/h		5000	10000	15000	20000	25000
Operating method	/	Colour LCD touch screen					
Communication method	/	Rs485 ,Modbus RTU					
Refrigeration inlet and outlet pipe diameter	Inch	1	1	1.5	2	2.5	2.5
Size (L*W*H)	cm	140*70*160	140*100*180	150*95*170	200*92*160	225*112*220	225*112*220

HIGH AND LOW TEMPERATURE EQUIPMENT SERIES

高低温系列

SEMICONDUCTOR INDUSTRY ACSM SERIES

Main applications: semiconductor materials (including silicon wafers, photoresists, cmp polishing materials, wet electronics chemicals, precursors for wafer body encapsulation materials, M0 sources, etc.), semiconductor equipment (including cleaners, oxidation ovens, lithography, PVD/PECVD, probe tables, inspection equipment, sorting machines, data centre liquid-cooled CDU distribution units, etc.).

MAIN FEATURES

- Intelligent PID algorithm, support for segmented temperature control, automatic algorithms, fuzzy control and other functions, high accuracy of temperature control
- Refrigerant system using hot gas bypass temperature control, dynamic adjustment of the system load, energy saving and high efficiency
- The product series covers multiple temperature zones, can match the semiconductor industry with different processes
- Special optimisation of the structure, low vibration, low noise
- With Automatic purge function
- Optimised for coolant piping process, low risk of leakage.

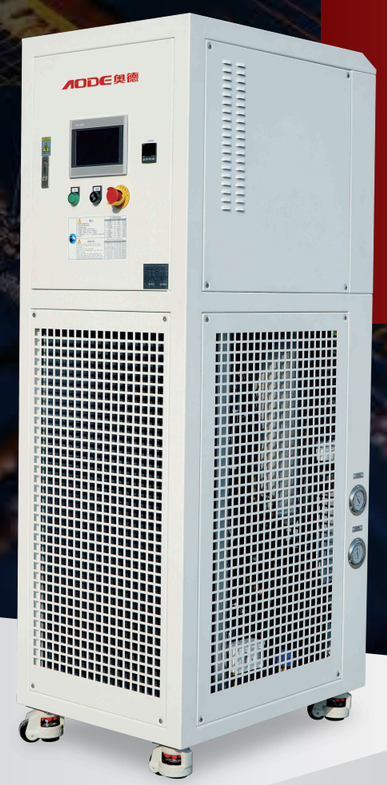

【ACSM SERIES】AIR CHILLER

精密冷水机 +5°C ❄ +40°C

ITEM	UNIT	ACSM02AS-5	ACSM03AS-5	ACSM05AS-5	ACSM10AS-5
cooling capacity(10°C)	kW	5.4	8.7	13.7	30.2
CompressorPower	kW	1.6	2.3	3.1	6.3
Circulation pump power	kW	0.4	0.4	0.6	0.8
Fan power	kW	0.3	0.5	1.2	2.4
Total Input Power	kW	2.3	3.2	4.9	9.5
Running Current	A	5.0	6.8	11.9	21.3
Power supply	/	3PH～380V～50Hz（Customisable 220V）			
Circulation medium	/	Deionised water, fluoride solution, etc.			
Temp control accuracy	°C	± 0.1			
Rated flow rate	L/min	25	25	40	80
Condenser type	/	High-efficiency air-cooled condenser			
Fuel tank volume	L	⩾ 2	⩾ 3	⩾ 5	⩾ 10
Refrigeration inlet and outlet pipe diameter	Inch	1.0"	1.0"	1.2"	1.5"
Refrigerant	/	R410A			
Weight	kg	100.0	130.0	150.0	300.0
Operating noise @ 1m	dB(A)	⩽ 70			
Size (L*W*H)	cm	40*60*100	40*100*110	60*100*120	60*100*150

【ACSM SERIES】WATER CHILLER

精密冷水机 +5°C ❄ +40°C

ITEM	UNIT	ACSM02WS-5	ACSM03WS-5	ACSM05WS-5	ACSM10WS-5
Cooling Capacity	kW	5.9	9.6	14.8	31.4
CompressorPower	kW	1.6	2.3	3.1	6.3
Circulation pump power	kW	0.4	0.4	0.6	0.8
Total Input Power	kW	2.0	2.7	3.7	7.1
Running Current	A	4.5	6.0	8.9	17.4
Power supply	/	3PH～380V～50Hz（Customisable 220V）			
Circulation medium	/	Deionised water, fluoride solution, etc.			
Temp control accuracy	°C	±0.1			
Rated flow rate	L/min	25	25	40	80
Pressure range	Bar	0.5 ～3.0	0.5 ～ 3.0	0.5 ～3.0	0.5 ～3.0
Condenser type	/	High-efficiency water-cooled condenser			
Fuel tank volume	L	⩾2	⩾3	⩾5	⩾10
Cooling water flow	m^3/h	1.8	2.5	4.2	9.9
Refrigeration inlet and outlet pipe diameter	Inch	1.0"	1.0"	1.2"	1.5"
Cooling inlet and outlet pipe diameter	Inch	1.0"			1.5"
Refrigerant	/	R410A			
Weight	kg	100.0	130.0	150.0	300.0
Operating noise @ 1m	dB(A)	⩽65			
Size（L*W*H)	cm	40*60*100	40*100*110	60*100*120	60*100*150

【ACSM SERIES】AIR CHILLER

高低温一体智能温控机 -20°C ❄ +100°C

ITEM	UNIT	ACSM02A06KW-20	ACSM03A09KW-20	ACSM05A12KW-20
Cooling Capacity(+20°C~+100°C)	kW	4.9	7.6	12.7
Cooling Capacity(-5°C)	kW	2.4	3.9	6.4
Cooling Capacity(-20°C)	kW	0.7	1.6	2.6
Calorific value	kW	3.0	3.0	6.0
CompressorPower	kW	2.3	2.9	4.7
Circulation pump power	kW	0.8	0.8	1.5
Fan power	kW	0.3	0.5	1.2
Total Input Power	kW	6.4	7.2	13.4
Power supply	/	3PH～380V～50Hz（Customisable 220V）		
Circulation medium	/	Low-temperature silicone oil, fluorinated fluid, etc.		
Temp control accuracy	°C	± 0.5		
Rated flow rate	L/min	38	56	95
Pressure range	kPa	25 ～ 150	25 ～ 150	25 ～ 180
Condenser type	/	High-efficiency air-cooled condenser		
Fuel tank volume	L	⩾ 10	⩾ 10	⩾ 10
Refrigeration inlet and outlet pipe diameter	Inch	1.2"	1.2"	1.2"
Refrigerant	/	R404A		
Weight	kg	300	350	420
Operating noise @1m	dB(A)	⩽ 70		
Size(L*W*H)	cm	50*60*150	60*70*150	70*80*180

【ACSM SERIES】AIR CHILLER

高低温一体智能温控机 -35°C ❄ +100°C

ITEM	UNIT	ACSM02A06KW-35	ACSM03A09KW-35	ACSM05A12KW-35
Cooling Capacity (+20°C~+100°C)	kW	5.4	7.5	13.6
Cooling Capacity (-5°C)	kW	2.5	3.6	6.5
Cooling Capacity (-20°C)	kW	1.0	1.6	2.8
Cooling Capacity (-35°C)	kW	0.1	0.4	0.6
Calorific value	kW	3.0	3.0	6.0
CompressorPower	kW	2.6	2.9	5.0
Circulation pump power	kW	0.8	0.8	1.5
Fan power	kW	0.3	0.5	1.2
Power Input	kW	6.7	7.2	13.7
Running Current	A	14.6	15.8	30.1
Power supply	/	3PH～380V～50Hz（Customisable 220V）		
Circulation medium	/	Low-temperature silicone oil, fluorinated fluid, etc.		
Temp control accuracy	°C	± 0.5		
Rated flow rate	L/min	41	55	101
Pressure range	kPa	25～150	25～150	25～180
Condenser type	/	High-efficiency air-cooled condenser		
Fuel tank volume	L	⩾ 10	⩾ 10	⩾ 10
Refrigeration inlet and outlet pipe diameter	Inch	1.2"	1.2"	1.2"
Refrigerant	/	R404A		
Weight	kg	300	350	420
Operating noise @1m	dB(A)	⩽ 70		
Size（L*W*H)	cm	50*60*150	60*70*150	70*80*180

【ACSM SERIES】AIR CHILLER

高低温一体智能温控机 -60℃ +100℃

ITEM	UNIT	ACSM04A06KW-60	ACSM06A09KW-60	ACSM08A12KW-60
Cooling Capacity (+20℃~+100℃)	kW	4.8	5.4	10.0
Cooling Capacity (-20℃)	kW	2.5	2.7	5.0
Cooling Capacity (-40℃)	kW	1.4	1.4	2.5
Cooling Capacity (-60℃)	kW	0.5	0.7	1.6
Calorific value	kW	6.0	6.0	6.0
CompressorPower	kW	4.5	5.4	10.1
Circulation pump power	kW	0.4	0.8	1.5
Fan power	kW	1.0	1.2	2.5
Power Input	kW	11.9	13.4	20.1
Running Current	A	26.1	29.4	44.1
Power supply	/	3PH～380V～50Hz（Customisable 220V）		
Circulation medium	/	Low-temperature silicone oil, fluorinated fluid, etc.		
Temp control accuracy	℃	± 0.5		
Rated flow rate	L/min	33	39	73
Pressure range	kPa	25～150	25～150	25～180
Condenser type	/	High-efficiency air-cooled condenser		
Fuel tank volume	L	⩾ 10	⩾ 10	⩾ 10
Refrigeration inlet and outlet pipe diameter	Inch	3/4"	1.2"	1.2"
Refrigerant	/	R404A 、 R23		
Weight	kg	350	420	420
Operating noise @1m	dB(A)	⩽ 70		
Size（L*W*H)	cm	60*70*150	70*80*180	70*80*180

【ACSM SERIES】AIR CHILLER

高低温一体智能温控机 -90℃ +100℃

ITEM	UNIT	ACSM08A06KW-90	ACSM10A09KW-90	ACSM15A12KW-90
Cooling Capacity(+20℃~+100℃)	kW	6.0	7.9	9.4
Cooling Capacity(-20℃)	kW	3.5	4.0	4.9
Cooling Capacity(-40℃)	kW	1.8	2.1	2.6
Cooling Capacity(-70℃)	kW	1.1	1.3	1.7
Cooling Capacity(-90℃)	kW	0.5	0.7	1.0
Calorific value	kW	6.0	6.0	6.0
CompressorPower	kW	10.1	11.2	13.1
Circulation pump power	kW	1.5	1.5	1.5
Fan power	kW	2.5	2.8	3.2
Power Input	kW	20.1	21.5	23.8
Running Current	A	42.1	45.2	49.9
Power supply	/	3PH～380V～50Hz（Customisable 220V）		
Circulation medium	/	Low-temperature silicone oil, fluorinated fluid, etc.		
Temp control accuracy	℃	± 0.5		
Rated flow rate	L/min	35	40	50
Pressure range	kPa	25～180	25～300	25～300
Condenser type	/	High-efficiency air-cooled condenser		
Fuel tank volume	L	⩾ 10	⩾ 20	⩾ 20
Refrigeration inlet and outlet pipe diameter	Inch	1.2"	1.2"	1.2"
Refrigerant	/	R404A 、 R23 、 R14		
Weight	kg	420	500	850
Operating noise @1m	dB(A)	⩽ 70		
Size（L*W*H)	cm	70*80*180	80*120*200	100*120*200

【ACSM SERIES】WATER CHILLER

高低温一体智能温控机 -20℃ +100℃

ITEM	UNIT	ACSM02W06KW-20	ACSM03W09KW-20	ACSM05W12KW-20
Cooling Capacity（+20 ℃ ~+100 ℃）	kW	4.9	7.6	12.7
Cooling Capacity（-5℃）	kW	2.4	3.9	6.4
Cooling Capacity（-20 ℃）	kW	0.7	1.6	2.6
Calorific value	kW	3.0	3.0	6.0
CompressorPower	kW	2.3	2.9	4.7
Circulation pump power	kW	0.8	0.8	1.5
Power Input	kW	6.1	6.7	12.2
Running Current	A	13.8	16.7	28.5
Power supply	/	3PH～380V～50Hz（Customisable 220V）		
Circulation medium	/	Low-temperature silicone oil, fluorinated fluid, etc.		
Temp control accuracy	℃	± 0.5		
Rated flow rate	L/min	38	56	95
Pressure range	kPa	25～150	25～150	25～180
Condenser type	/	High-efficiency water-cooled condenser		
Fuel tank volume	L	⩾ 10	⩾ 10	⩾ 10
Cooling water flow	m^3/h	1.8	2.5	4.2
Refrigeration inlet and outlet pipe diameter	Inch	1.2"	1.2"	1.2"
Cooling inlet and outlet pipe diameter	Inch	1.0"	1.0"	1.5"
Refrigerant	/	R404A		
Weight	kg	300	350	420
Operating noise @1m	dB(A)	⩽ 65		
Size（L*W*H)	cm	50*60*150	60*70*150	70*80*180

【ACSM SERIES】WATER CHILLER

高低温一体智能温控机 -35℃ +100℃

ITEM	UNIT	ACSM02W06KW-35	ACSM03W09KW-35	ACSM05W12KW-35
Cooling Capacity（+20 ℃ ~+100 ℃）	kW	5.4	7.5	13.6
Cooling Capacity（-5℃）	kW	2.5	3.6	6.5
Cooling Capacity（-20 ℃）	kW	1.0	1.6	2.8
Cooling Capacity（-35 ℃）	kW	0.1	0.4	0.6
Calorific value	kW	3.0	3.0	6.0
CompressorPower	kW	2.6	2.9	5.0
Circulation pump power	kW	0.8	0.8	1.5
Power Input	kW	6.4	6.7	12.5
Running Current	A	14.0	14.7	27.5
Power supply	/	3PH～380V～50Hz（Customisable 220V）		
Circulation medium	/	Low-temperature silicone oil, fluorinated fluid, etc.		
Temp control accuracy	℃	± 0.5		
Rated flow rate	L/min	41	55	101
Pressure range	kPa	25～150	25～150	25～180
Condenser type	/	High-efficiency water-cooled condenser		
Fuel tank volume	L	⩾ 10	⩾ 10	⩾ 10
Cooling water flow	m^3/h	1.9	2.5	4.5
Refrigeration inlet and outlet pipe diameter	Inch	1.2"	1.2"	1.2"
Cooling inlet and outlet pipe diameter	Inch	1.0"	1.0"	1.5"
Refrigerant	/	R404A		
Weight	kg	300	350	420
Operating noise @1m	dB(A)	⩽ 65		
Size（L*W*H)	cm	50*60*150	60*70*150	70*80*180

【ACSM SERIES】WATER CHILLER

高低温一体智能温控机 -60℃ +100℃

ITEM	UNIT	ACSM04W06KW-60	ACSM06W09KW-60	ACSM08W12KW-60
Cooling Capacity (+20 ℃~+100℃)	kW	4.8	5.4	10.0
Cooling Capacity (-20 ℃)	kW	2.5	2.7	5.0
Cooling Capacity (-40 ℃)	kW	1.4	1.4	2.5
Cooling Capacity (-60 ℃)	kW	0.5	0.7	1.6
Calorific value	kW	6.0	6.0	6.0
CompressorPower	kW	4.5	5.4	10.1
Circulation pump power	kW	0.4	0.8	1.5
Power Input	kW	10.9	12.2	17.6
Running Current	A	22.8	25.5	36.9
Power supply	/	3PH～380V～50Hz（Customisable 220V）		
Circulation medium	/	Low-temperature silicone oil, fluorinated fluid, etc.		
Temp control accuracy	℃	±0.5		
Rated flow rate	L/min	33	39	73
Pressure range	kPa	25～150	25～150	25～180
Condenser type	/	High-efficiency water-cooled condenser		
Fuel tank volume	L	⩾10	⩾10	⩾10
Cooling water flow	m^3/h	2.0	2.5	4.6
Refrigeration inlet and outlet pipe diameter	Inch	3/4"	1.2"	1.2"
Cooling inlet and outlet pipe diameter	Inch	1.0"	1.0"	1.5"
Refrigerant	/	R404A 、R23		
Weight	kg	350	420	420
Operating noise @1m	dB(A)	⩽65		
Size (L*W*H)	cm	60*70*150	70*80*180	70*80*180

【ACSM SERIES】WATER CHILLER

高低温一体智能温控机 -90℃ +100℃

ITEM	UNIT	ACSM08W06KW-90	ACSM10W09KW-90	ACSM15W12KW-90
Cooling Capacity (+20 ℃~+100 ℃)	kW	6.0	7.9	9.4
Cooling Capacity (-20 ℃)	kW	3.5	4.0	4.9
Cooling Capacity (-40 ℃)	kW	1.8	2.1	2.6
Cooling Capacity (-70 ℃)	kW	1.1	1.3	1.7
Cooling Capacity (-90 ℃)	kW	0.5	0.7	1.0
Calorific value	kW	6.0	9.0	12.0
CompressorPower	kW	10.1	11.2	13.1
Circulation pump power	kW	1.5	1.5	1.5
Power Input	kW	17.6	21.7	26.6
Running Current	A	35.1	43.4	53.1
Power supply	/	3PH～380V～50Hz（Customisable 220V）		
Circulation medium	/	Low-temperature silicone oil, fluorinated fluid, etc.		
Temp control accuracy	℃	±0.5		
Rated flow rate	L/min	35	40	50
Pressure range	kPa	25～180	25～300	25～300
Condenser type	/	High-efficiency water-cooled condenser		
Fuel tank volume	L	⩾10	⩾20	⩾20
Cooling water flow	m^3/h	4.6	5.1	5.9
Refrigeration inlet and outlet pipe diameter	Inch	1.2"	1.2"	1.2"
Cooling inlet and outlet pipe diameter	Inch	1.5"	2.0"	2.0"
Refrigerant	/	R404A 、R23 R14		
Weight	kg	420	500	850
Operating noise @1m	dB(A)	⩽65		
Size (L*W*H)	cm	70*80*180	80*120*200	100*120*200

【ACSM SERIES】DIRECT-COOLED CHILLER

高低温一体智能温控机 -40℃ -15℃

The direct-cooled Chiller is connected to the customer-side evaporator by piping, using the phase change of the refrigerant to absorb heat and cool the evaporator. Compared with liquid cooling, it has the advantage of greater heat flow density and is suitable for applications where a larger heat exchange volume can be achieved in a small volume.

ITEM	UNIT	ACSM02D-40	ACSM03D-40	ACSM05D-40	ACSM10D-40	ACSM15D-40
Cooling Capacity （-40℃）	kW	0.9	1.2	2.1	4.2	5.6
CompressorPower	kW	2.6	2.9	5.0	8.2	14.0
Running Current	A	5.2	5.8	10.0	16.4	28.0
Power supply	/	3PH～380V～50Hz（Customisable 220V）				
Circulation medium	/	R404A、R507C				
Temp control range	℃	-40～15				
Temp control accuracy	℃	±1				
CompressorType	/	Totally enclosed scroll type/semi-enclosed piston type				
Throttle	/	Expansion valve				
Operating method	/	Colour LCD touch screen				
Safety Protection Device	/	Power reverse phase, motor overload, high and low voltage, over temperature protection, etc.				
Communication method	/	Rs485， Modbus RTU				

HIGH AND LOW TEMPERATURE INTEGRATED MACHINERY

高低温一体智能温控机

- The media side of the closed loop design, the system volume is small, fast rate of temperature rise and fall.
- Support for a wide range of temperatures, high precision temperature control.
- Intelligent PID algorithms, support for temperature control, automatic algorithm, fuzzy control and other functions.
- Alarms and protections, safe and reliable operation.
- Expansion tanks to maintain the normal temperature, do not participate in the medium circulation.
- Refrigeration and heating output analog stepless adjustment.

【ACH SERIES】

高低温一体智能温控机 -20°C +200°C

ITEM	UNIT	ACH02W 06KW-20	ACH03W 09KW-20	ACH05W 12KW-20	ACH10W 24KW-20	ACH15W 36KW-20
Cooling Capacity (+20°C~+200°C)	kW	4.9	7.6	12.7	32.5	41.2
Cooling Capacity (-5°C)	kW	2.4	3.9	6.4	14.3	21.8
Cooling Capacity (-20°C)	kW	0.7	1.6	2.6	6.5	10.6
Calorific value	kW	6.0	9.0	12.0	24.0	36.0
CompressorPower	kW	2.3	2.9	4.7	9.5	14.5
Circulation pump power	kW	0.8	0.8	1.5	2.2	2.2
Power Input	kW	9.1	12.7	18.2	35.7	52.7
Running Current	A	18.1	25.4	36.4	71.4	105.4
Power supply	/	3PH～380V～50Hz (Customisable 220V)				
Circulation medium	/	Low-temperature silicone oil, fluorinated fluid, etc.				
Temp control accuracy	°C	±1				
Rated flow rate	L/min	38	56	95	232	290
Pressure range	kPa	25～150	25～150	25～180	25～300	25～300
Condenser type	/	High-efficiency water-cooled condenser				
Fuel tank volume	L	⩾10	⩾10	⩾10	⩾20	⩾20
Cooling water flow	m^3/h	1.8	2.5	4.2	9.9	12.9
Communication method	/	Rs485, Modbus RTU				
Refrigeration inlet and outlet pipe diameter	Inch	1.2"	1.2"	1.2"	2.0"	2.0"
Cooling inlet and outlet pipe diameter	Inch	1.0"	1.0"	1.5"	2.0"	2.0"
Refrigerant	/	R404A				
Weight	kg	300	350	420	500	800
Operating noise @1m	dB(A)	⩽80				
Size (L*W*H)	cm	50*60*150	60*70*150	70*80*180	80*120*200	100*120*200

★ Depending on process requirements, the temperature range can be extended to -35-250°C if special customisation is required.

【ACH SERIES】

高低温一体智能温控机

ITEM	UNIT	-60°C +200°C			-90°C +200°C		
		ACH04W 06KW-60	ACH08W 12KW-60	ACH15W 18KW-60	ACH08W 06KW-90	ACH10W 09KW-90	ACH15W 12KW-90
Cooling Capacity (+200°C)	kW	4.8	10.0	13.4	6.0	7.9	9.4
Cooling Capacity (+100°C)	kW	4.8	10.0	13.4	6.0	7.9	9.4
Cooling Capacity (+50°C)	kW	4.8	10.0	13.4	6.0	7.9	9.4
Cooling Capacity (+20°C)	kW	4.8	10.0	13.4	6.0	7.9	9.4
Cooling Capacity (-20°C)	kW	2.5	5.0	7.0	3.5	4.0	4.9
Cooling Capacity (-40°C)	kW	1.4	2.5	3.8	1.8	2.1	2.6
Cooling Capacity (-60°C)	kW	0.5	1.6	2.5	1.3	1.5	2.0
Cooling Capacity (-90°C)	/	/	/	/	0.5	0.7	1.0
Calorific value	kW	6.0	12.0	18.0	6.0	9.0	12.0
CompressorPower	kW	4.5	10.1	13.1	10.1	11.2	13.1
Circulation pump power	kW	0.4	1.5	1.5	1.5	1.5	1.5
Power Input	kW	10.9	23.6	32.6	17.6	21.7	26.6
Running Current	A	21.7	47.1	65.1	35.1	43.4	53.1
Power supply	/	3PH～380V～50Hz (Customisable 220V)					
Circulation medium	/	Low-temperature silicone oil, fluorinated fluid, etc.					
Temp control range	°C	-60～+200			-90～+200		
Temp control accuracy	°C	±1					
Rated flow rate	L/min	33	73	95	35	40	50
Pressure range	kPa	25～150	25～180	25～300	25～180	25～300	25～300
CompressorType	/	Semi-closed piston type					
Circulation pump type	/	Stainless steel magnetic pumps					
Throttle	/	Expansion valve					
Evaporator type	/	High-efficiency stainless steel brazed plate					
Condenser type	/	High-efficiency water-cooled condenser					
Fuel tank volume	L	⩾10	⩾10	⩾20	⩾10	⩾20	⩾20
Cooling water flow	m^3/h	2.0	4.6	5.9	4.6	5.1	5.9
Operating method	/	Colour LCD touch screen					
Safety Protection Device	/	Power reverse phase, motor overload, high and low voltage, liquid level, over-temperature protection, etc.					
Communication method	/	Rs485、ModbusRTU					
Refrigeration inlet and outlet pipe diameter	Inch	3/4"	1.2"	1.2"	1.2"	1.2"	1.2"
Cooling inlet and outlet pipe diameter	Inch	1.0"	1.5"	2.0"	1.5"	2.0"	2.0"
Refrigerant	/	R404A、R23			R404A、R23、R14		
Weight	kg	350	420	850	420	500	850
Operating noise @1m	dB(A)	⩽80					
Size (L*W*H)	cm	60*70*150	70*80*180	100*120*200	70*80*180	80*120*200	100*120*200

APPLICATIONS
应用领域

TO ACHIEVE INDUSTRY-WIDE COVERAGE IN THE INDUSTRIAL SECTOR AND IMPORT SUBSTITUTION OF HIGH-END PRODUCTS.

5G materials, 3C communications, energy storage, integrated die-casting, circuit boards, semiconductors, military, new energy, aerospace, scientific research, rail transportation, automotive parts, chemicals, pharmaceuticals, precision injection moulding, rubber, sheet/sheet/film, food, printing and dyeing, packaging, drying, composite materials, carbon fibre products and so on.

COMPONENT
选用配件

Germany BITZER, Germany BOCK, Taiwan HANZHONG, the United States of America Copeland, Denmark Danfoss, Japan Panasonic compressor; Denmark Grundfos pump, Germany specK pump; Alfa Laval heat exchanger

High-efficiency condenser, evaporator; Danish Danfoss, Italy Carle throttle device; Danish Danfoss pressure transmitter; Japan ARK air filter; Italy OR solenoid valve; Germany RTK proportional valve and so on.

Germany Siemens controller, human-machine interface, contactor, thermal relay, Japan Omron phase sequence protection and other well-known brands of electronic components

COOPERATION BRANDS
合作品牌

SIEMENS, Danfoss, HANBELL, spirax sarco, YOKOGAWA, bürkert, ALLWEILER, GEA, Panasonic, GRUNDFOS, SWEP, ASCO numatics, RTK, SAMSON, KSB

模温机安装管路流程图
MOLD TEMPERATURE CONTROL UNIT PIPELINE INSTALLATION DRAWING

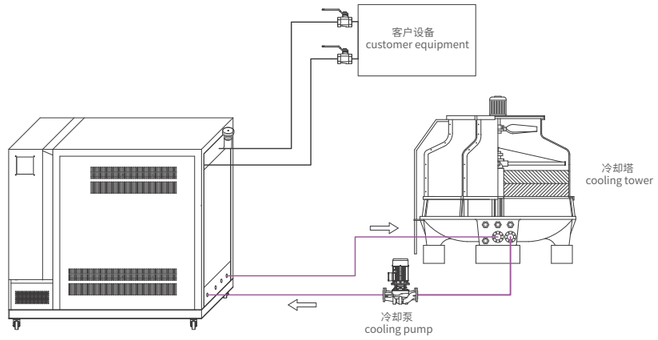

模温机、冷水机组合外部管路连接图
MOLD TEMPERATURE CONTROL UNIT AND CHILLER'S PIPELINE CONNECTION DIAGRAM

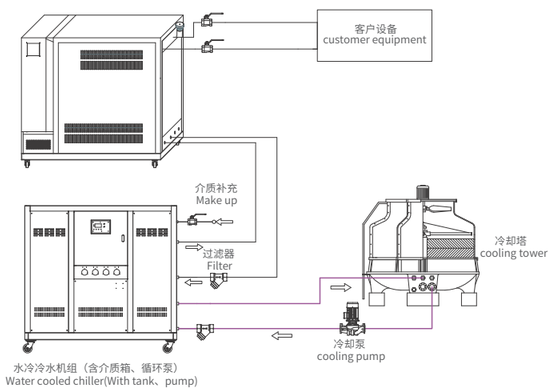

燃气(油)有机热载体炉外部连接管路
GAS /FUEL FIRED ORGANIC HEAT TRANSFER MATERIAL HEATER PIPELINE DRAWING

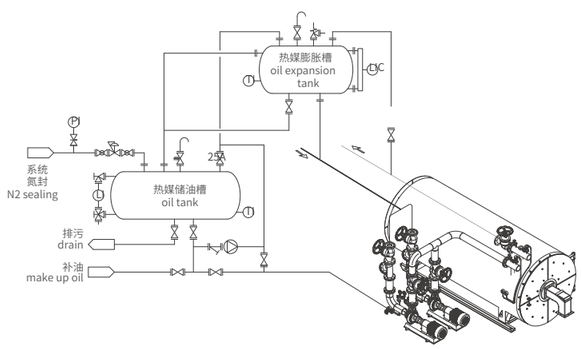

风冷螺杆冷水机组外部管路连接参考图
AIR COOLED SCREW CHILLER PIPE CONNECTION DIAGRAM

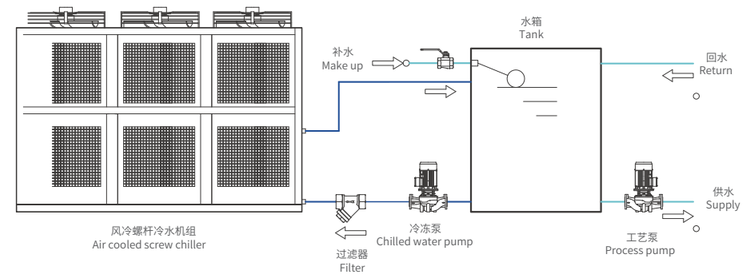

水冷冷水(油)机组外部管路连接参考图
WATER COOLED CHILLER PIPE CONNECTION DIAGRAM

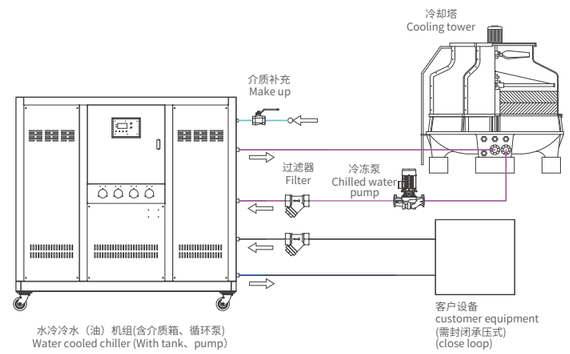

水冷螺杆冷水机组外部管路连接参考图
WATER COOLED SCREW CHILLER PIPE CONNECTION DIAGRAM

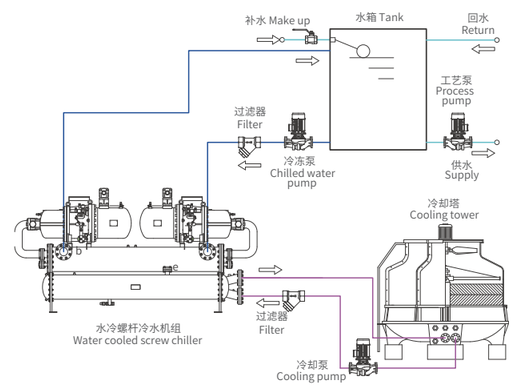

SUCCESSFUL CASES
成功案例

CHOOSE AODE

In China, Aode's professionalism makes the national brand replace the imported brand.
Overseas, Aode's quality makes us the pride of Made in China. Temperature control we guarantee for you.
For more cases,please visit the website： www.aodetcu.com

❶ Automotive integrated die-casting	❷ Die-casting industry	❸ Wind power industry	❹ chemical medicine
❺ Testing Industry	❻ Organic heat carrier furnace (chemical fibre)	❼ petrochemicals	❽ 5G circuit boards
❾ Rubber industry	❿ Moulding temperature control	⓫ Temperature control for calendering lines	⓬ Injection moulding industry


1


2


3


4


5


6


7


8


9


10


11


12

OUR PARTNERS
合作伙伴.

11000+成功案例
11,000 + Success Stories

已有超过80000台/套奥德设备在全球范围内连续稳定运转
There are more than 80,000 units of AODE equipment in continuous and stable operation around the world.

*以上列举部分合作品牌且排名不分先后

化工行业 CHEMICAL INDUSTRY

新能源/汽车部件检测 NEW ENERGY VEHICLE/AUTOMOTIVE COMPONENT TESTING

橡胶行业 RUBBER INDUSTRY

塑胶行业 PLASTIC INDUSTRY

压铸行业 DIECASTING INDUSTRY

片板模 SHEET/PLATE/fiLM INDUSTRY

复材行业 COMPOSITE MATERIAL INDUSTRY

大学及科研院校 UNIVERSITIES AND RESEARCH INSTITUTES